SET-UP SHEET

XRAY T4

RACE	AIDA最終戦
TRACK	AIDA Circuit
NAME	井上 貴之
CITY / COUNTRY	
CONTACT	

DATE	2012/11/25	TEMPERATURE / °F or °C	AIR	TRACK

QUALIFYING POSITION	BEST LAPTIME /sec	FINAL POSITION	RACE LENGTH /minutes
1		1	

TRACK CONDITION	☐ CARPET	☒ ASPHALT	☐ TECHNICAL
	☒ MIXED	☐ FAST	
TRACTION	☐ LOW	☒ MEDIUM	☐ HIGH

FRONT	REAR
TRANSMISSION	

SOLID AXLE	☒ YES	BALL DIFFERENTIAL	☐ YES
SOLID ONE WAY DIFF.	☐ YES		
ONE WAY DIFFERENTIAL	☐ YES		
GEAR DIFFERENTIAL	☐ YES	GEAR DIFFERENTIAL	☒ YES
OIL		OIL	1500 /Cst

PINION / T	39	SPUR GEAR / T	108
FINAL DRIVE RATIO	5.26	ROLLOUT	0.00

FRONT		REAR
2.3-2.6	XRAY SPRINGS	2.5-2.8
アソシ30	OIL / CST	アソシ30
	LENGTH /mm	
	PRELOAD /mm	
25	REBOUND %	25
☐ YES ☒ NO	FOAM INSERTS	☐ YES ☒ NO
☐ YES ☒ NO	O-RING ON SHAFT	☐ YES ☒ NO

☐ 3 HOLES	PISTONS	3 HOLES ☐
☒ 4 HOLES	1.0mm ☐	4 HOLES ☒
	1.1mm ☒	
	1.2mm ☐	
	OTHERS	

1.4	ANTI-ROLL BAR THICKNESS/mm	1.2

RUSH 24	TIRES	RUSH 24
	INSERTS	
	ADDITIVE	
	ADDITIVE TIMING	

FRONT LEFT | FRONT RIGHT | TREATED AREA | REAR LEFT | REAR RIGHT

	WHEELS	
S ☐ M ☐ H ☐	HARDNESS	S ☐ M ☐ H ☐

MOTOR	PRIME 13.5T JS	TIMING	
ROTOR		ARMATURE	
ESC		BATTERIES	
BODY	LTC-R LW	WING	

● ☒ - APPLIED S-SOFT M-MEDIUM H-HARD

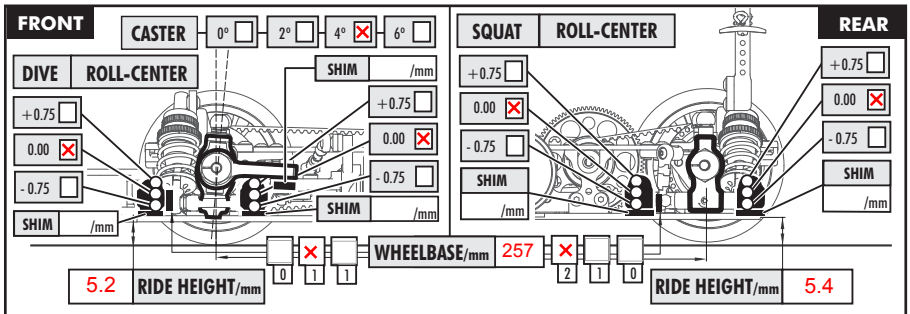

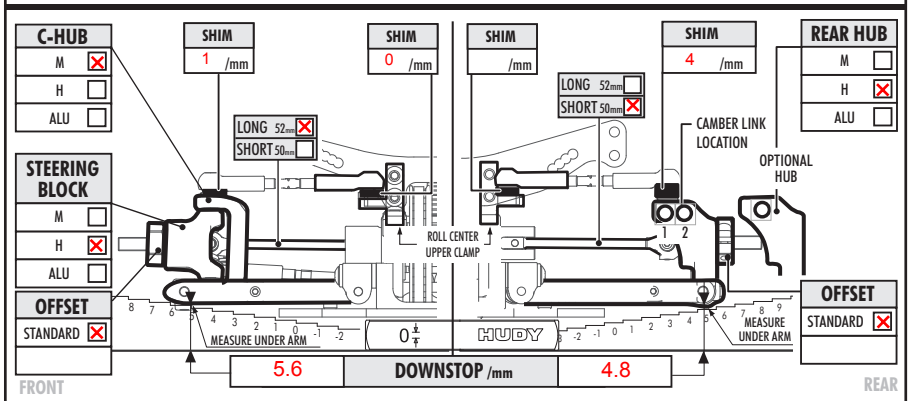

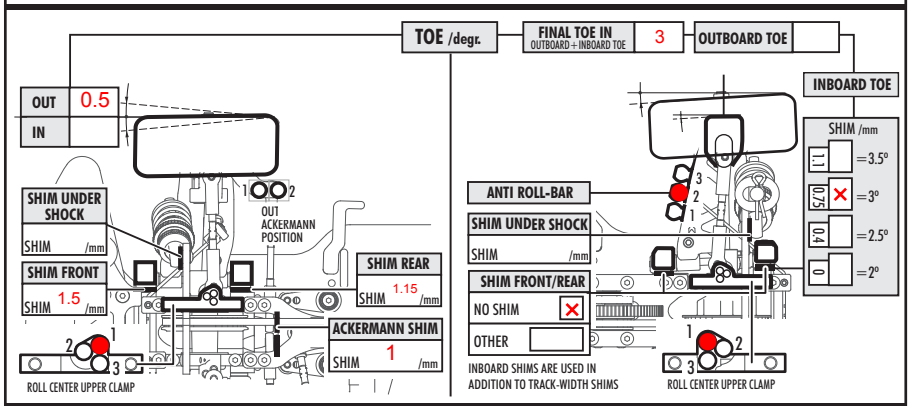

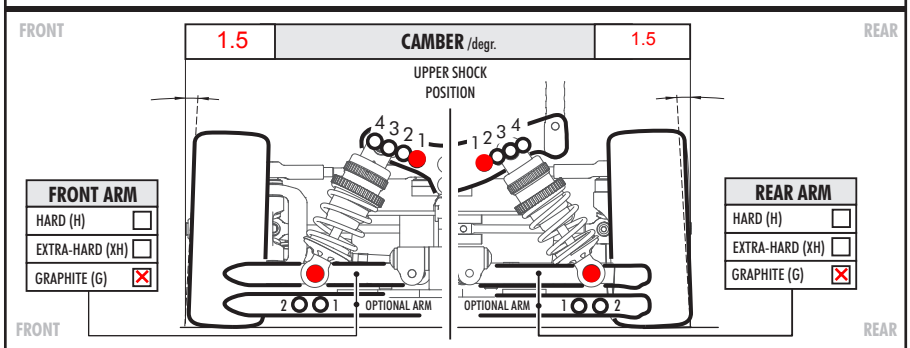

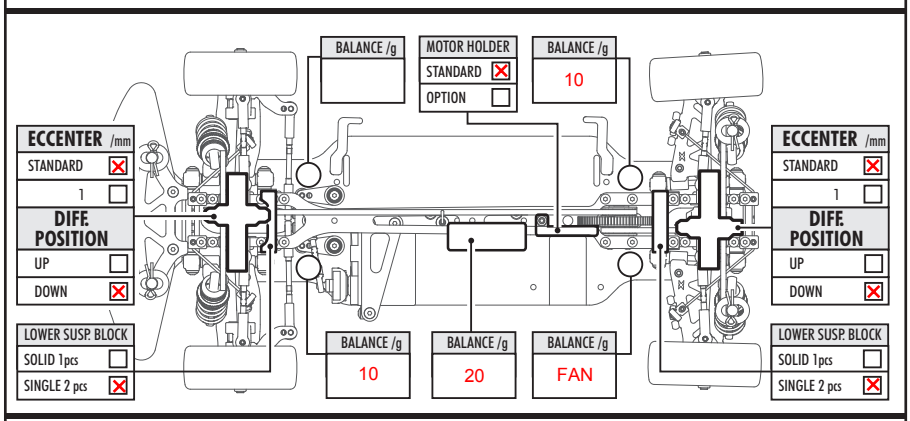

COMMENTS

reset all

VER. 6.0 © XRAY